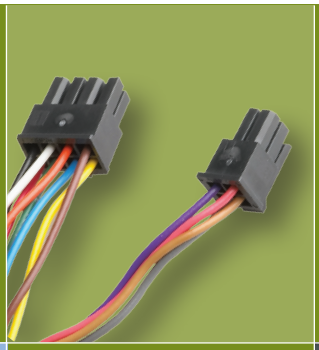

PEMKO
ASSA ABLOY

ASSA ABLOY, the global leader in door opening solutions

ElectroLynx® Continuous Geared Hinges:

Connecting Made Easy

PEMKO Continuous Geared Hinges with ElectroLynx® provide the cabling to transfer power from the door jamb to the door hardware. Using the ElectroLynx® standardized quick-connect system to ensure proper connections, these hinges are quick and easy to install. The wires and connectors are concealed preventing tampering and improving the aesthetics of the door opening.

Features	Benefits
Transfers power to the door device thru the hinge	Operate door hardware without unsightly cables
ElectroLynx® quick-connect system	Fast and easy connection, no electrician required to hang the door
Electrical wires are concealed	Tampering is prevented
5 Year Warranty	Trouble free operation

Applications:

- Healthcare
- Laboratories
- Airports
- Universities

Technical Specifications:

- Available in 4, 8 or 12 TRI-FLEX titanium copper alloy cables
- QC12 hinge contains an 8 position and 4 position Molex connectors
- Wire is 22AWG
- Each conductor is capable of carrying 7 amps at 24 volts with a 16 amp inrush current for 820 milliseconds

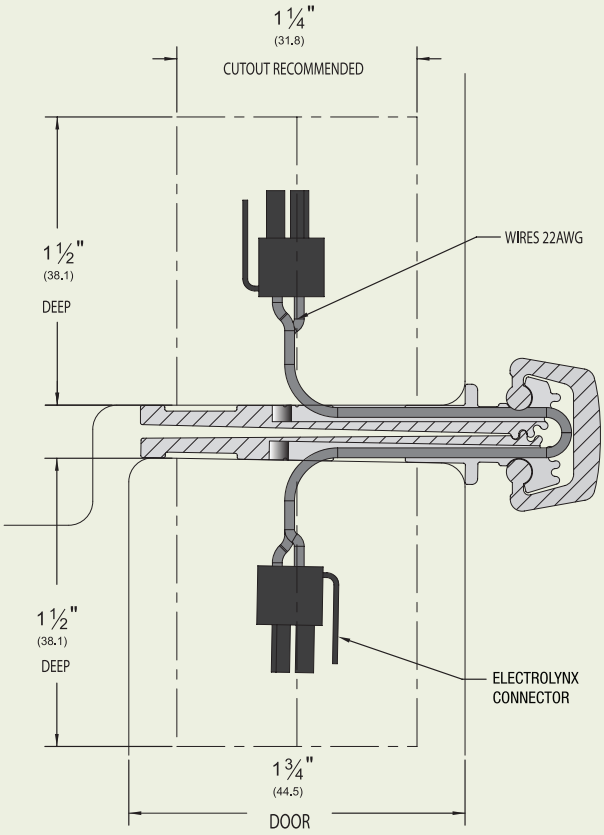

LISTED
Door Hinges
76Y2

ElectroLynx® Solutions

PEMKO ElectroLynx® Continuous Geared Hinge Modules are supplied with quick-connect Molex connectors. Designed with you in mind, installations are easier and quicker with no wires to splice.

Concealed connectors eliminate the need for separate or exposed wiring. Standard connectors and polarized mating parts make installation quick, easy, and smooth by simply snapping ends together. Three types are available for different service options.

Types:

SER

Serviceable/Removable Module hinges are provided in three sections allowing the current carrying cable to be serviced or ***replaced without removing the door from the frame.***

ACC

Accessible Feature is provided in a single section with the leaves modified to pivot at the location of the current carrying cable to allow access to the cables and connected wiring.

QC

Quick Connect hinges are provided in a single section with the wires already run through the hinge.

Electrical modification performance is under warranty for five (5) years. See catalog for complete details.

How to Order:

Please see the catalog for the "shorthand code" for example, a Clear Anodized, Full-Mortise 83" hinge with a 4 wire Quick Connect transfer and Service/Removable module would be: CFM83HD x QC4-SER.

Hardwiring Made Easy™

ElectroLynx®

As part of their promise to provide innovative, fast and effective high security solutions to their customers, certain ASSA ABLOY Group brands offer ElectroLynx®, a universal quick-connect system that simplifies the electrification of the door opening.

ElectroLynx® is a registered trademark of ASSA ABLOY Inc.

PEMKO
ASSA ABLOY

www.pemko.com

Ventura, CA USA
P: 800.283.9988
F: 800.283.4050

Memphis, TN USA
P: 800.824.3018
F: 800.243.3656

Vancouver, BC CA
P: 877.535.7888
F: 877.535.7444

Toronto, ON CA
P: 877.535.7888
F: 877.535.7444

ASSA ABLOY, the global leader in door opening solutions

Copyright © 2011, 2014 Pemko Manufacturing Company, an ASSA ABLOY Group company. All rights reserved.
Reproduction in whole or in part without the express written permission of Pemko Manufacturing Company is prohibited.
80013-2/24/14